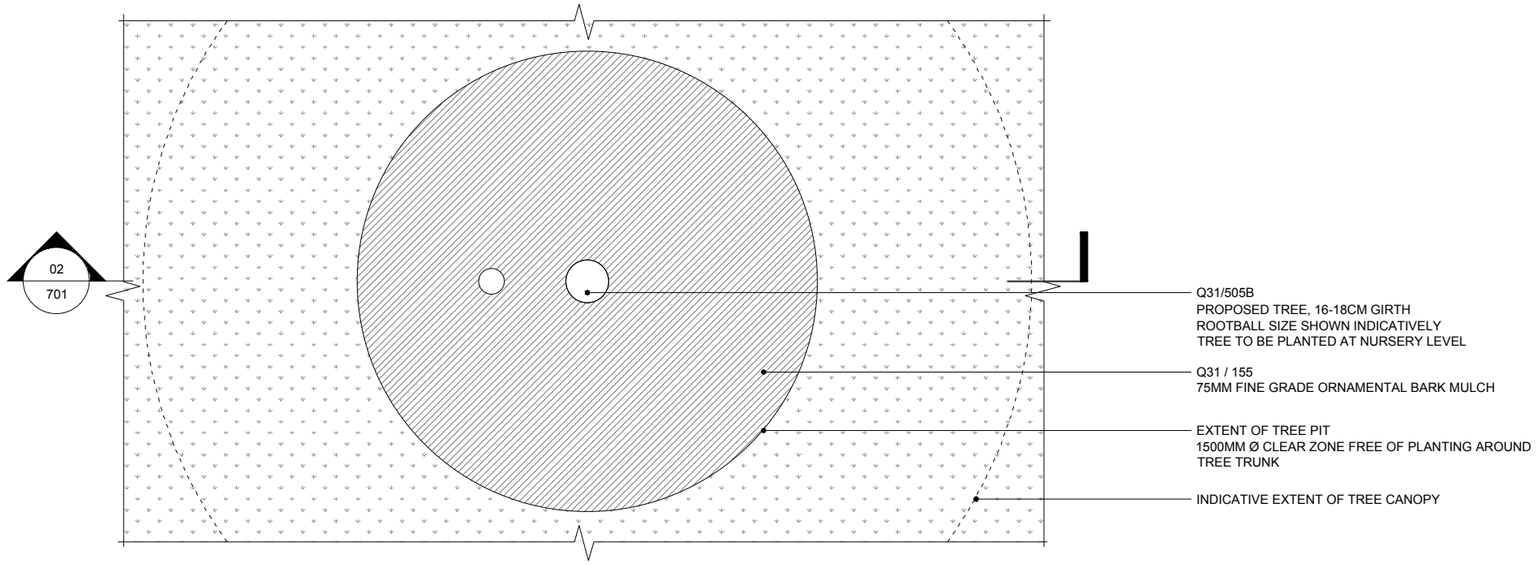

01 701 TYPICAL TREE PIT TYPE 02

PLAN

SCALE 1:20

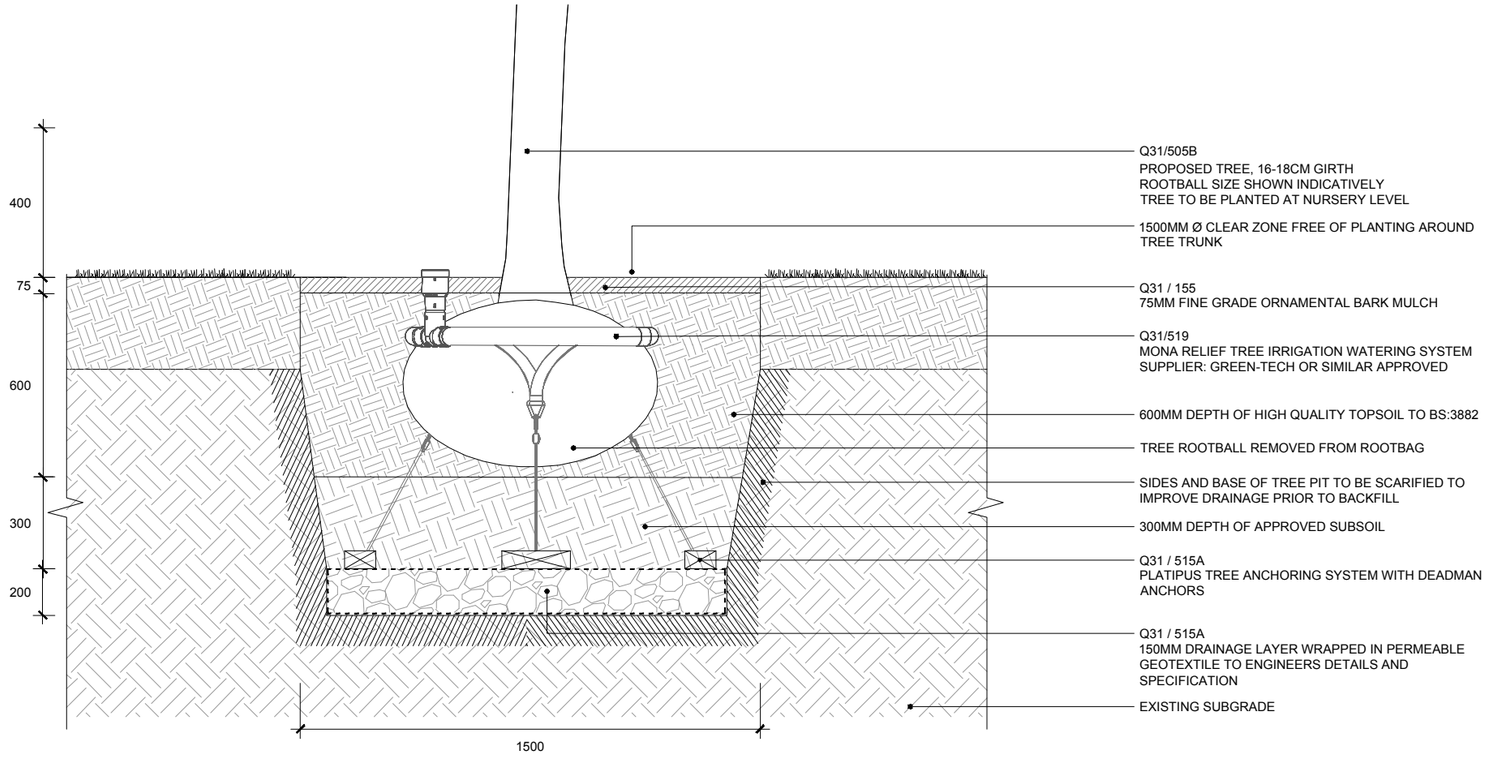

02 701 TYPICAL TREE PIT TYPE 02

SECTION

SCALE 1:20

0 1m

North

No dimensions are to be scaled from this drawing.
All dimensions are to be checked on site.
Area measurements for indicative purposes only.

This drawing is the property of Exterior Architecture Ltd.
No part of the drawing may be reproduced in any manner without permission from Exterior Architecture Ltd.

Client

REDROW LTD

Rev	Description	Date
----	----	----
----	----	----
----	----	----
----	----	----
----	----	----
----	----	----
----	----	----
----	----	----
----	----	----
----	----	----

EXTERIOR
ARCHITECTURE
LONDON: Studio 1S, Hewlett House, Havelock Terrace, London, SW8 4AS
MANCHESTER: Studio 537, The Royal Exchange, St Anns Square, Manchester, M2 7DH

E-Mail: office@exteriorarchitecture.com
Web: www.exteriorarchitecture.com

Project title

GREAT WILSEY PARK, HAVERHILL

Drawing title

PLANTING DETAILS 01

Issued By	London	T: 020 7978 2101	
Scale	1:20 @ A3	Drawn	KL
Status	PLANNING	Checked	RP
Date	09.07.2019	Approved	LP

Drawing number

EXA_1868_P_701

Revision

P:\LONDON PROJECTS\2018\1868_GREAT WILSEY PARK, HAVERHILL\01 CAD\02 SHEET LAYOUT\EXA_1868_P_701 PLANTING DETAILS 01.DWG