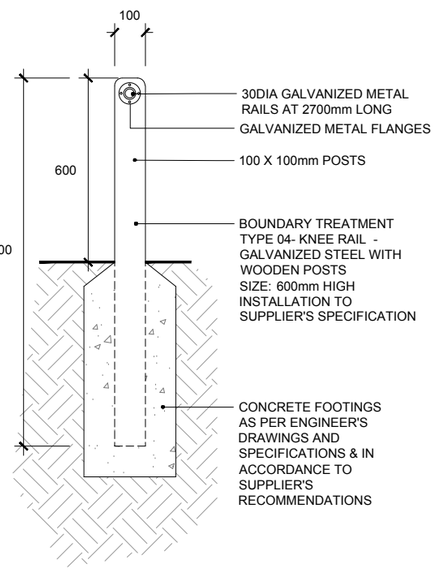

01 601 BOUNDARY TREATMENT TYPE 04 - KNEE RAIL
SECTION SCALE 1:20

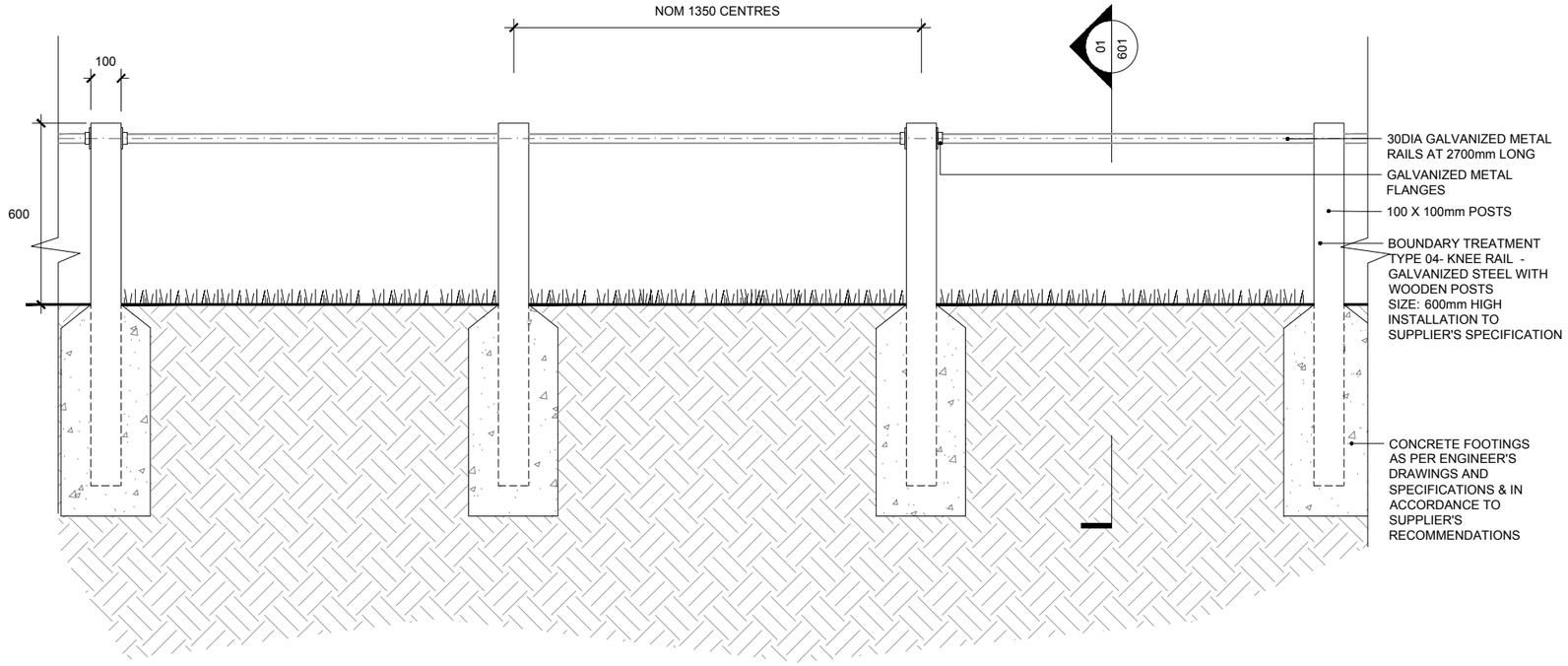

02 601 BOUNDARY TREATMENT TYPE 04 - KNEE RAIL
ELEVATION SCALE 1:20

No dimensions are to be scaled from this drawing.
All dimensions are to be checked on site.
Area measurements for indicative purposes only.

This drawing is the property of Exterior Architecture Ltd.
No part of the drawing may be reproduced in any manner without permission from Exterior Architecture Ltd.

Client
REDROW LTD

Rev	Description	Date
---	---	---
---	---	---
---	---	---
---	---	---
---	---	---
---	---	---
---	---	---
---	---	---
---	---	---
---	---	---

EXTERIOR ARCHITECTURE
LONDON: Studio 1S, Hewlett House, Havelock Terrace, London, SW8 4AS
MANCHESTER: Studio 537, The Royal Exchange, St Anns Square, Manchester, M2 7DH

E-Mail: office@exteriorarchitecture.com
Web: www.exteriorarchitecture.com

Project title
GREAT WILSEY PARK, HAVERHILL

Drawing title
KNEE RAIL DETAILS

Issued By	London	T: 020 7978 2101	
Scale	1:20 @ A3	Drawn	SC
Status	PLANNING	Checked	RP
Date	09.12.2019	Approved	LP

Drawing number
EXA_1868_P_601

Revision
*

P:\LONDON PROJECTS\2018\1868_GREAT WILSEY PARK, HAVERHILL\01 CAD\02 SHEET LAYOUT\EXA_1868_P_601.DWG