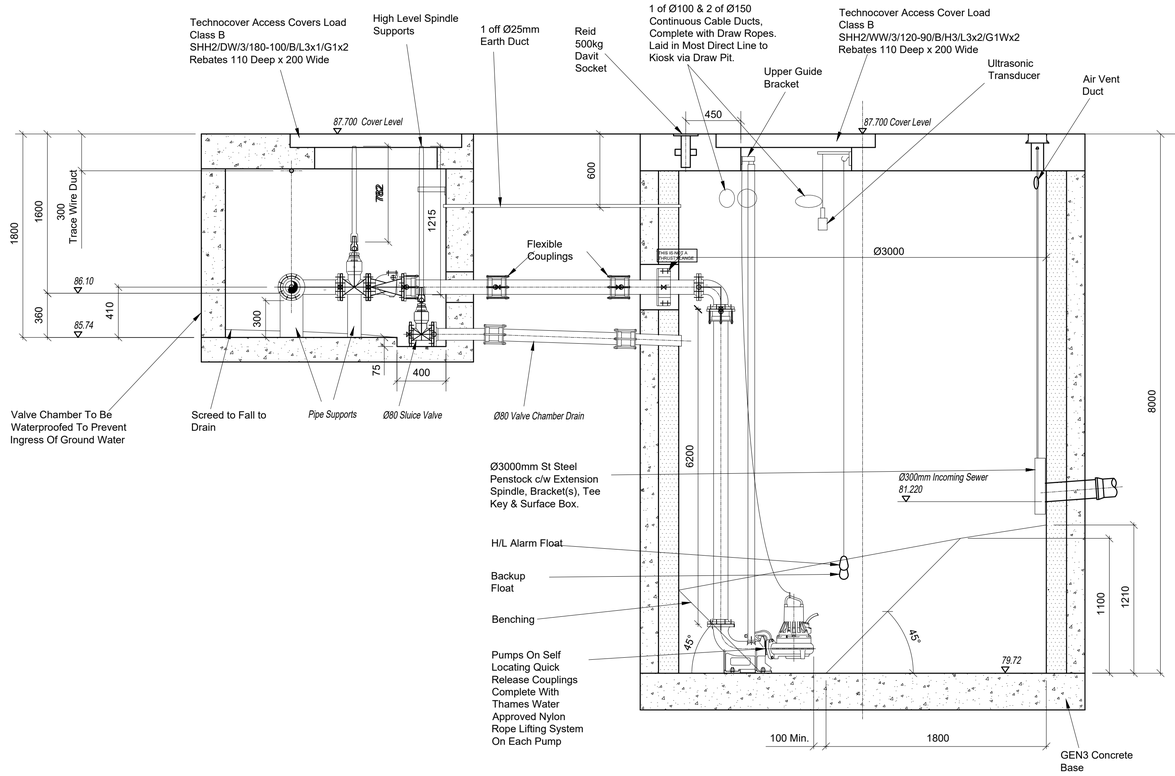

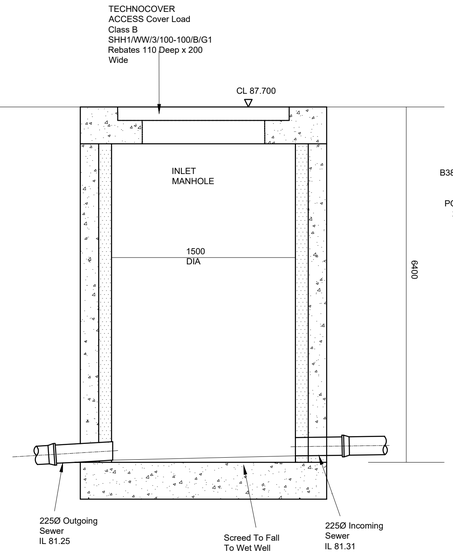

MANHOLE

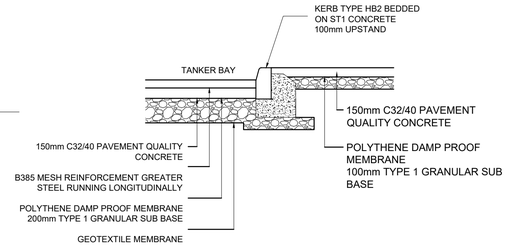

CONCRETE HARDSTANDING DETAIL

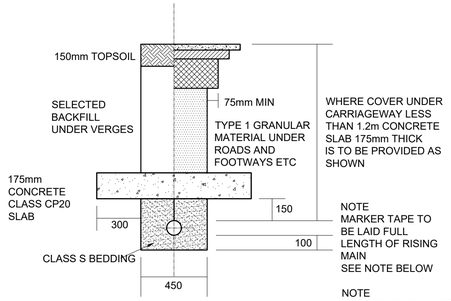

RISING MAIN TRENCH DETAIL

NOTES
ALL PIPEWORK UP TO AND INCLUDING THE ADAPTOR AT THE EXIT FROM THE VALVE CHAMBER TO BE PROVIDED BY THE PUMP MANUFACTURER

ALL WORKS INSIDE THE STATION TO BE UNDERTAKEN BY THE PUMP MANUFACTURER OR INSTALLER, EXCLUDING CIVILS WORKS AND DUCTING

ALL INLETS/OUTLETS ARE TO BE BOXED OUT BY THE CIVILS CONTRACTOR
SEALING AFTER INSTALLATION OF THE PIPEWORK IS TO BE UNDERTAKEN
BY THE PIPE INSTALLERS

NOTES
1. ALL DIMENSIONS IN MILLIMETRES UNLESS STATED OTHERWISE

2. ALL CIVILS WORK BY CIVILS CONTRACTOR INCLUDING MAKING GOOD
AROUND PIPES AFTER INSTALLATION, BENCHING, FIXING ALL STATION
STEEL WORK AND LAYING CABLE DUCTS ETC

3. ALL DUCTS 100 DIAMETER MINIMUM COMPLETE WITH DRAW ROPES
AND AVOIDING ACUTE CHANGES OF DIRECTION

4. REINFORCING BARS TO BE 75mm MINIMUM BELOW SURFACE

5. BENCHING TO BE 60° TO THE HORIZONTAL AND TO BE FORMED AFTER
PUMP INSTALLATION

6. DIRECTION OF DUCT SHOWN DIAGRAMATICALLY - ALL DUCTS TO BE
LAID ON MOST DIRECT LINE TO SUIT SERVICE BEING CARRIED

7. STRUCTURAL DETAIL ILLUSTRATIVE ONLY, MAY BE WORKED TO FOR
DIMENSIONS BUT STRUCTURE TO BE PROPERLY DESIGNED/SPECIFIED
BY STRUCTURAL ENGINEER

8. ALL WORK TO COMPLY WITH "SEWERS FOR ADOPTION -6th EDITION"

NOTE
MARKER TAPE - A GREEN TAPE MARKED "SEWAGE PUMPING MAIN BELOW" (OR SIMILAR) AND CONTAINING A TRACER WIRE MUST BE LAID APPROXIMATELY 300mm ABOVE THE CROWN OF THE RISING MAIN AND EFFECTIVELY BONDED TO ANY ON-LINE VALVES AND STATION PIPEWORK. ("PLYAGE HRD" BY ROBERT FRAZER INDUSTRIAL, ASHVILLE WAY, CAMBRIDGE ROAD INDUSTRIAL ESTATE , WHETSTONE, LEICESTER, LE8 3NU OR APPROVED EQUAL)

FOR TENDER PURPOSES ONLY - SUBJECT TO DETAILED M&E & STRUCTURAL DESIGN BY OTHERS

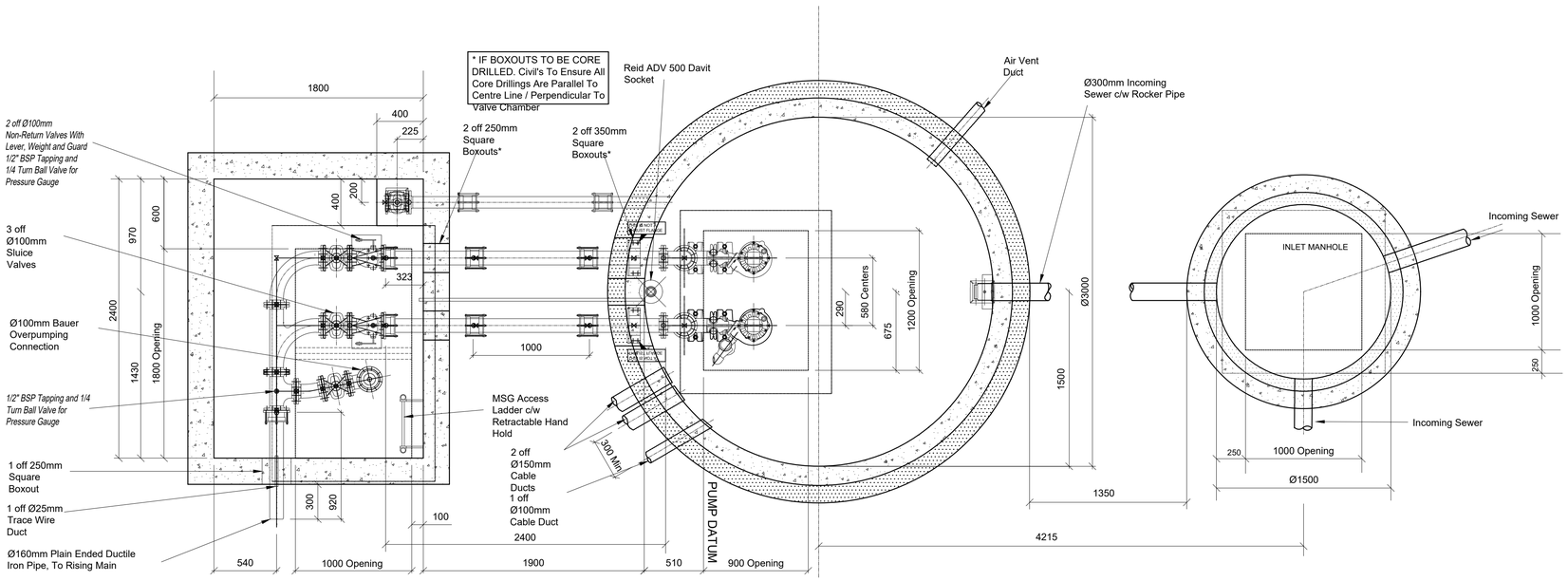

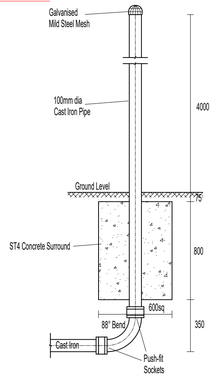

AIR VENT DETAIL

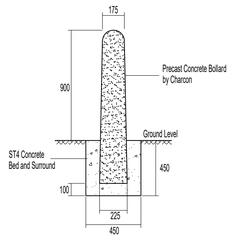

CONCRETE BOLLARD DETAIL

Rev	Description	Date	Drawn	Checked

Drawing Approval Status:-

N Section 104 | N/A Section 38 | N/A Section 278

FOR TENDER

Wormald Burrows Partnership Ltd
Civil Engineering Consultants
12a - 18a Hitchin Street, Biggleswade, SG18 8AX
Tel: (01767) 317244 Fax: (01767) 315434
Web: www.wormburp.com
Email: engineer@wormburp.com

Project:
Haverhill, Boyton Place - Phases 2-6

Drawing Description:
Pumping Station General Arrangement

Client:
PERSIMMON
Persimmon Homes (Suffolk) Ltd
Orion Court
Orion Court
Great Blakenham
Suffolk IP6 0LW

Drawing Number: E3838/570

Client Reference:

Scale: 1:500 @ A1
1:1000 @ A3

Designed By:	Drawn By:	Checked By:
JAG	JAG	PMW
Date: 31.03.21	Date: 31.03.21	Date: 31.01.21

Certified by Afnor UK

©This drawing is Copyright, Wormald Burrows Partnership Limited 2018.