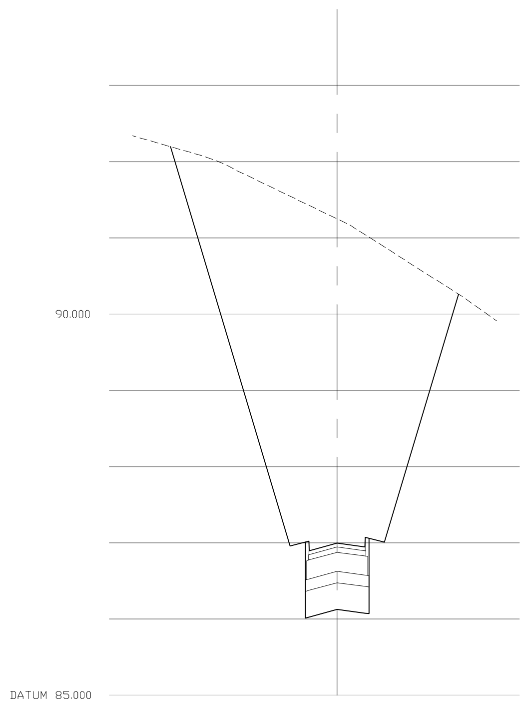

OFFSET		21.919	6.200	3.700	3.650	0.000	3.650	3.700 6.200	15.956	
GROUND LEVEL	92.340	92.196	91.546	91.426		91.248	91.042	90.880	90.260	89.911
FEATURE LEVEL		92.196	86.957	87.019	86.894	86.993	86.945	87.070 87.008	90.260	

ALIGNMENT RD_1
CHAINAGE 240.000

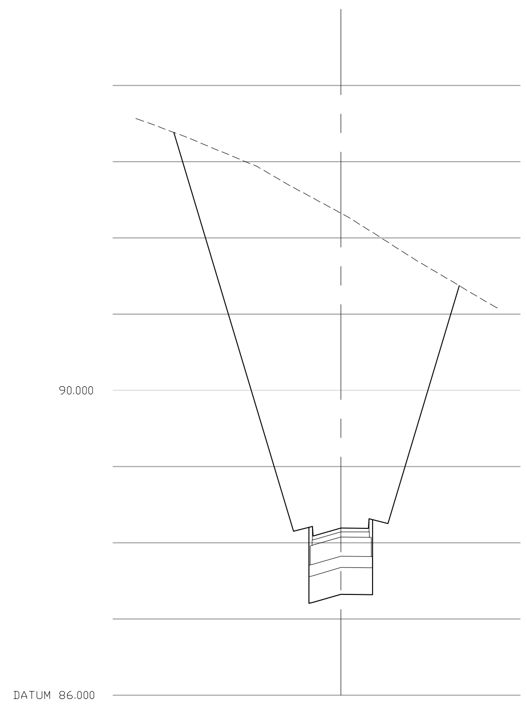

OFFSET		21.899	6.200	3.700	3.650	0.000	3.650	3.700 6.200	15.558	
GROUND LEVEL	93.568	93.383	92.659	92.524		92.324	92.103	91.940	91.371	91.078
FEATURE LEVEL		93.383	88.150	88.212	88.087	88.193	88.189	88.314 88.252	91.371	

ALIGNMENT RD_1
CHAINAGE 260.000

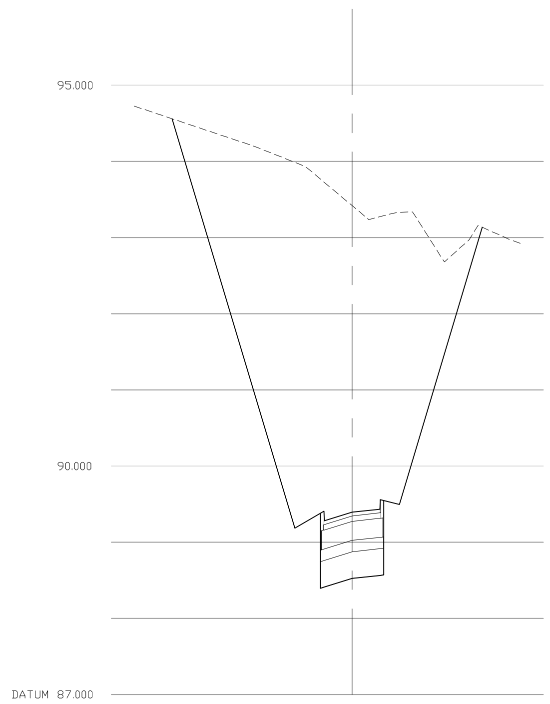

OFFSET		23.652	7.524	3.700	3.650	0.000	3.650	3.700 6.200	17.116	
GROUND LEVEL	94.726	94.559	93.987	93.729		93.419	93.273	93.330	93.135	92.924
FEATURE LEVEL		94.559	89.183	89.405	89.280	89.393	89.433	89.558 89.496	93.135	

ALIGNMENT RD_1
CHAINAGE 280.000

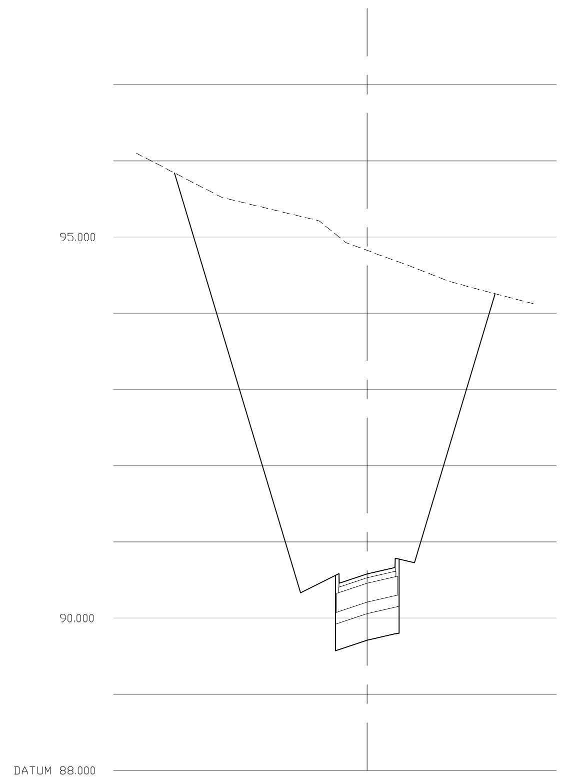

OFFSET		25.286	8.753	3.700	3.650	0.000	3.650	3.700 6.200	16.798	
GROUND LEVEL	96.098	95.840	95.270	95.000		94.824	94.690	94.595	94.256	94.126
FEATURE LEVEL		95.840	90.329	90.581	90.456	90.577	90.661	90.786 90.724	94.256	

ALIGNMENT RD_1
CHAINAGE 300.000

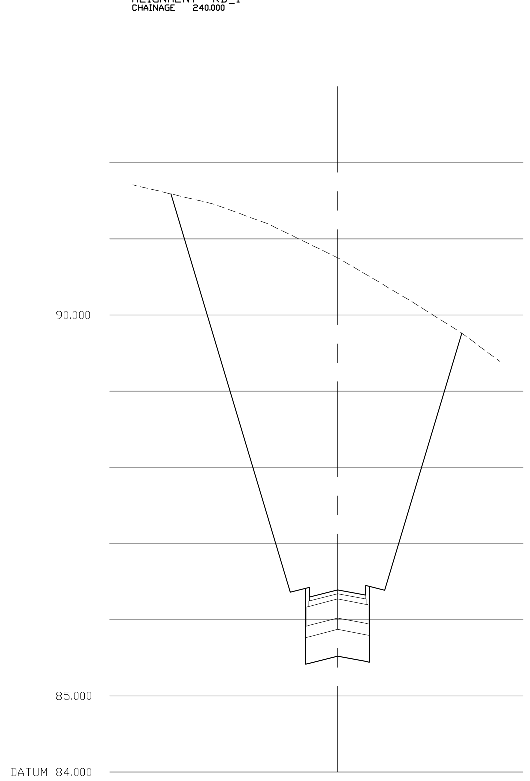

OFFSET		21.896	6.200	3.700	3.650	0.000	3.650	3.700 6.200	16.327	
GROUND LEVEL	91.711	91.593	91.056	90.934		90.753	90.539	90.388	89.762	89.390
FEATURE LEVEL		91.593	86.361	86.423	86.298	86.393	86.323	86.448 86.386	89.762	

ALIGNMENT RD_1
CHAINAGE 230.000

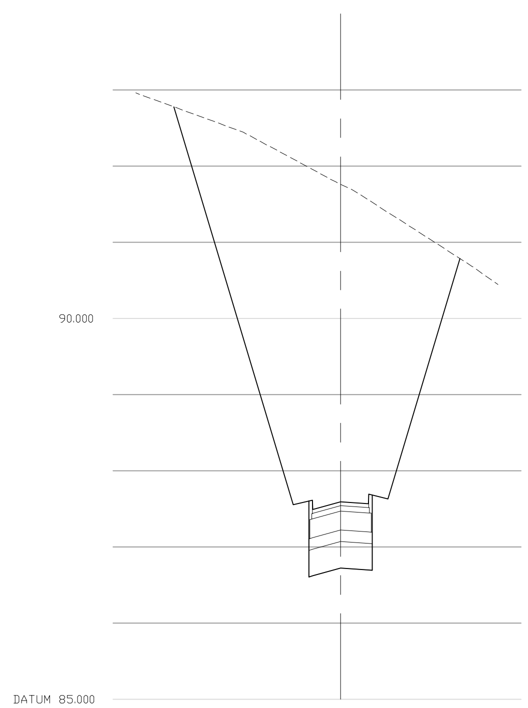

OFFSET		21.879	6.200	3.700	3.650	0.000	3.650	3.700 6.200	15.671	
GROUND LEVEL	92.962	92.780	92.092	91.958		91.763	91.558	91.395	90.787	90.446
FEATURE LEVEL		92.780	87.553	87.616	87.491	87.593	87.567	87.692 87.630	90.787	

ALIGNMENT RD_1
CHAINAGE 250.000

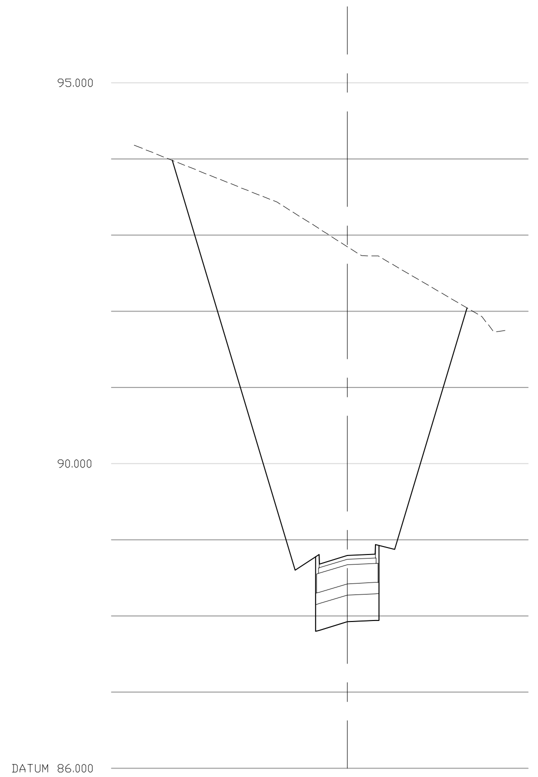

OFFSET		22.984	6.846	3.700	3.650	0.000	3.650	3.700 6.200	15.712	
GROUND LEVEL	94.183	93.983	93.285	93.085		92.849	92.729	92.602	92.044	91.748
FEATURE LEVEL		93.983	88.604	88.808	88.683	88.793	88.811	88.936 88.874	92.044	

ALIGNMENT RD_1
CHAINAGE 270.000

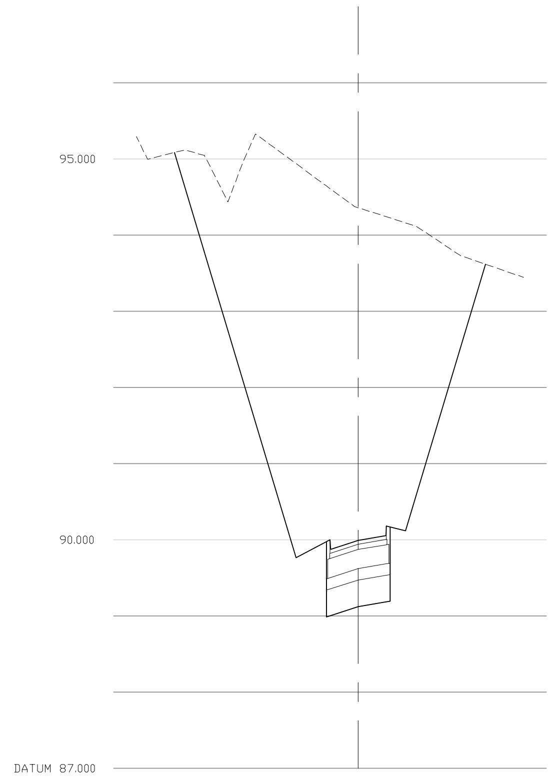

OFFSET		24.116	8.147	3.700	3.650	0.000	3.650	3.700 6.200	16.703	
GROUND LEVEL	95.294	95.086	94.938	94.612		94.361	94.243	94.161	93.619	93.447
FEATURE LEVEL		95.086	89.764	90.001	89.876	89.993	90.055	90.180 90.117	93.619	

ALIGNMENT RD_1
CHAINAGE 290.000

NOTES

1. THIS DRAWING IS TO BE READ IN CONJUNCTION WITH ALL RELEVANT ENGINEERS, ARCHITECTS AND SPECIALISTS DRAWINGS AND THE SPECIFICATION.

2. DO NOT SCALE FROM THIS DRAWING MANUALLY OR ELECTRONICALLY. WRITTEN PERMISSION MUST BE OBTAINED FROM MLM PRIOR TO SCALING ELECTRONICALLY OR USING THIS ELECTRONIC FILE.

3. PRELIMINARY DESIGN DETAILS:

   - SINGLE 7.3m WIDE TWO WAY CARRIAGEWAY
   - 2.5m MINIMUM VERGE ON BOTH SIDES OF CARRIAGEWAY
   - 1 IN 3 SLOPES (CUT AND FILL) TO EXISTING GROUND PROFILE

- 3.5% SUPERELEVATION APPLIED TRANSITIONS / CURVES
- STANDARD 2.5% CAMBER APPLIED TO STRAIGHTS

4. SECTIONS BASED ON HORIZONTAL / VERTICAL ALIGNMENT SHOWN ON DRAWINGS 612263/72 TO 78

5. FOR TYPICAL CROSS SECTIONS REFER TO DRAWINGS 612263/79

Rev	Date	Description	Made	Checked
.	.	.	.	.

Drawing Status: FOR APPROVAL

MLM
Consulting Civil, Structural & Building Services Engineers
25, London Road, Ipswich, Suffolk IP1 2HF
Tel: 01473 231100 Fax: 01473 231515
Website: www.mlm.uk.com
Ashford * Cambridge * Chelmsford * London * Norwich.

Client
BIDWELLS PROPERTY CONSULTANTS, TRUMPINGTON CAMBRIDGE CB2 9LD

Project
NORTH WEST HAVERHILL LAND OWNERS CONSORTIUM NORTH WEST HAVERHILL RELIEF ROAD

Drawing Title
CROSS SECTIONS
CHAINAGE 230m TO 300m (BASED ON A 85KPH DESIGN SPEED WITH DEPARTURES)
SHEET 3 OF 16

Drawn/Design	Checked	Approved	Date
CBP/JJB	JJB	RJE	11.02.09

Scales: HORIZ 1:500 @ A1, VERT 1:100 @ A1; 1:1000 & 1:200 RESPECTIVELY @ A3

Drawing No. 612263/82

Rev P1